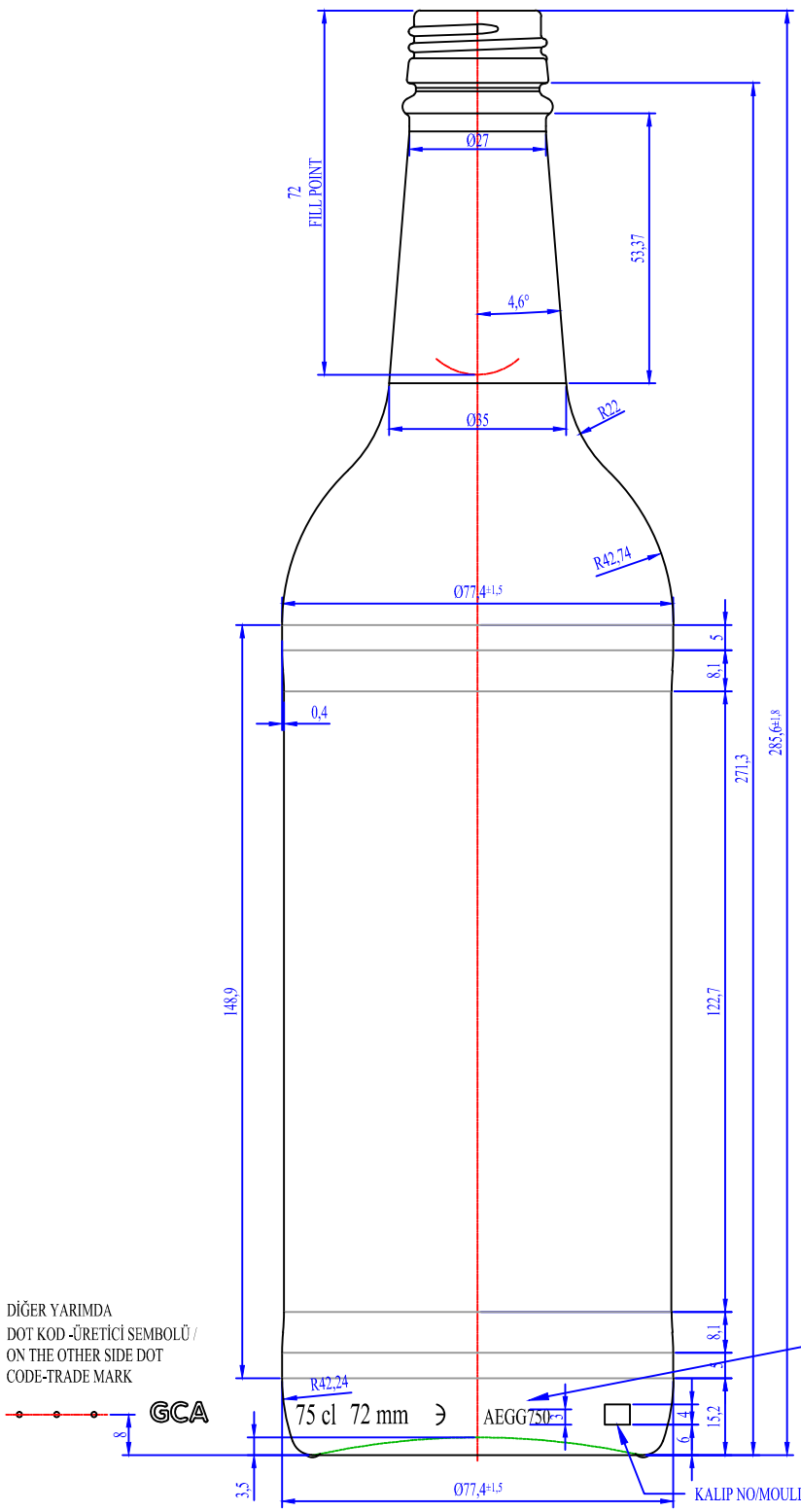

ÜRÜN ÖZEL./ITEM SPEC.	
KOD/CODE	8511
CİNSİ/BEVERAGE	With Gas/ Bottle
SİLME HACİM/ BRIMFULL CAPACITY	780cc±10cc
CAM GRAMAJI/ WEIGHT	400 gr
DOLUM HACMİ/ FILLING CAPACITY	750 cc
BOY/LENGTH	285,6 mm
KAFA YAPISI/ FINISH TYPE	28 MCA 3 WITH BEAD
DENGE AÇISI/TILT ANGLE	17,24°
TCK/TGT	2,61 mm
MAX. İÇ BASINÇ(20°)/MAX INT. PRESSURE(20°)	10 bar
DOLUM BAOŞLUGU/VACUITY	%3,8
VERSİYON/VERSION	V1

FRGH075

TASARIM/DESIGNED BY	Ş. ESRA ÇETİNKAYA		
ÇİZEN/DRAWN BY	AYHAN KORKMAZ		
KONTROL/CHECKED BY	MUSTAFA AKYOL		
ONAY/PASSED BY			
TARİH/DATE	17.07.2019		
PROSES/PROCESS	P&B	B&B	

GCA

ÖLÇEK/SCALE 1/1

GCA TASARIMI OLAN BU RESİM HİÇBİR ŞEKİLDE YETKİLİDEN İZİN ALMADAN KULLANILAMAZ,ÇOĞALTILAMAZ, DEĞİŞTİRİLEMEZ VE BAŞKASINA VERİLEMEZ. / WITHOUT THE WRITTEN CONSTENT OF GCA UNAUTHORIZED USE AND-OR REPODUCTION OF THE TECHNICAL DRAWINGS, AND-OR SHARING OF THE MENTIONED DOCUMENTS WITH THE THIRD PARTIES ARE STRICTLY PROHOBITED.

