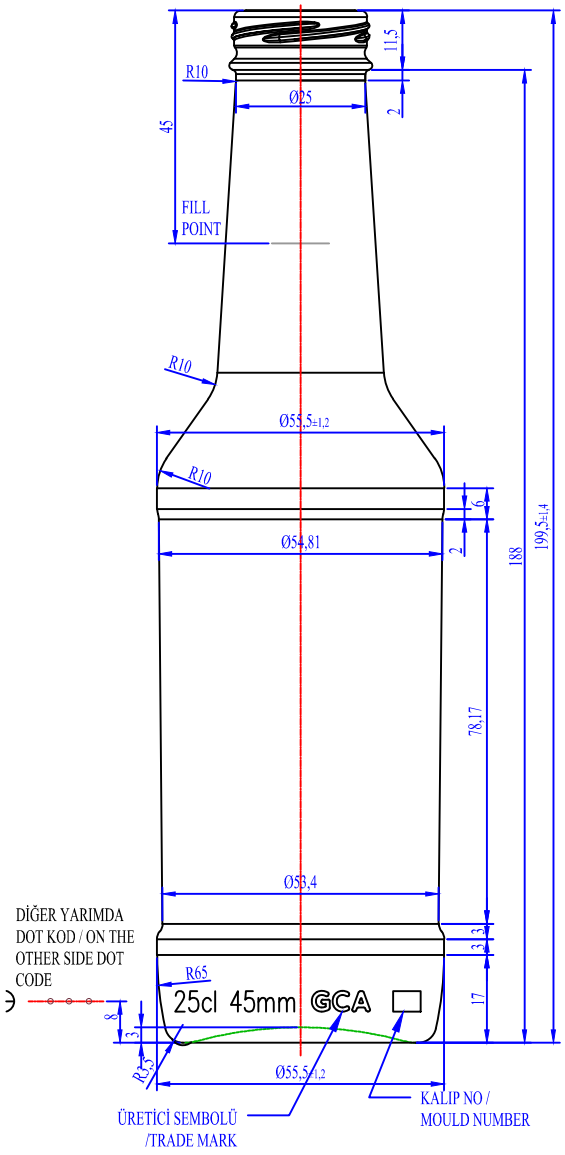

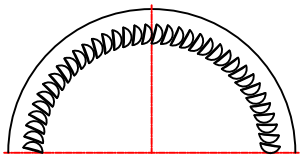

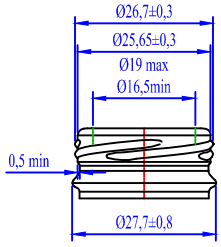

ÜRÜN ÖZEL./ITEM SPEC.	
KOD/CODE	****
CİNSİ/BEVERAGE	Şişe / Bottle
SİLME HACİM/ BRIMFULL CAPACITY	265±6cc
CAM GRAMAJI/ WEIGHT	155 gr
DOLUM HACMİ/ FILLING CAPACITY	250 cc
BOY/LENGTH	199,5 mm
KAFA YAPISI/ FINISH TYPE	26 TWIST CROWN (2)
DENGE AÇISI/TILT ANGLE	17,34°
TCK/TGT	2,06mm
MAX. İÇ BASINÇ(20°)/MAX INT. PRESSURE(20°)	****
DOLUM BOŞLUĞU/VACUITY	%5,6
GRUP NO / GROUP NO VERSİYON / VERSION	72068 266 V1

ANONİM MEŞRUBAT 25cl

TASARIM/DESIGNED BY	MUSTAFA ÇETİN	21.03.2025	P&B
ÇİZEN/DRAWN BY	MUSTAFA AKYOL		B&B
KONTROL/CHECKED BY			
ONAY/PASSED BY			
TARİH/DATE			
PROSES/PROCESS			

GCA

ÖLÇEK/SCALE 1/1

GCA TASARIMI OLAN BU RESİM HİÇBİR ŞEKİLDE YETKİLİDEN İZİN ALMADAN KULLANILAMAZ,ÇOĞALTILAMAZ, DEĞİŞTİRİLEMEZ VE BAŞKASINA VERİLEMEZ. / WITHOUT THE WRITTEN CONSTENT OF GCA UNAUTHORIZED USE AND-OR REPODUCTION OF THE TECHNICAL DRAWINGS, AND-OR SHARING OF THE MENTIONED DOCUMENTS WITH THE THIRD PARTIES ARE STRICTLY PROHOBITED.