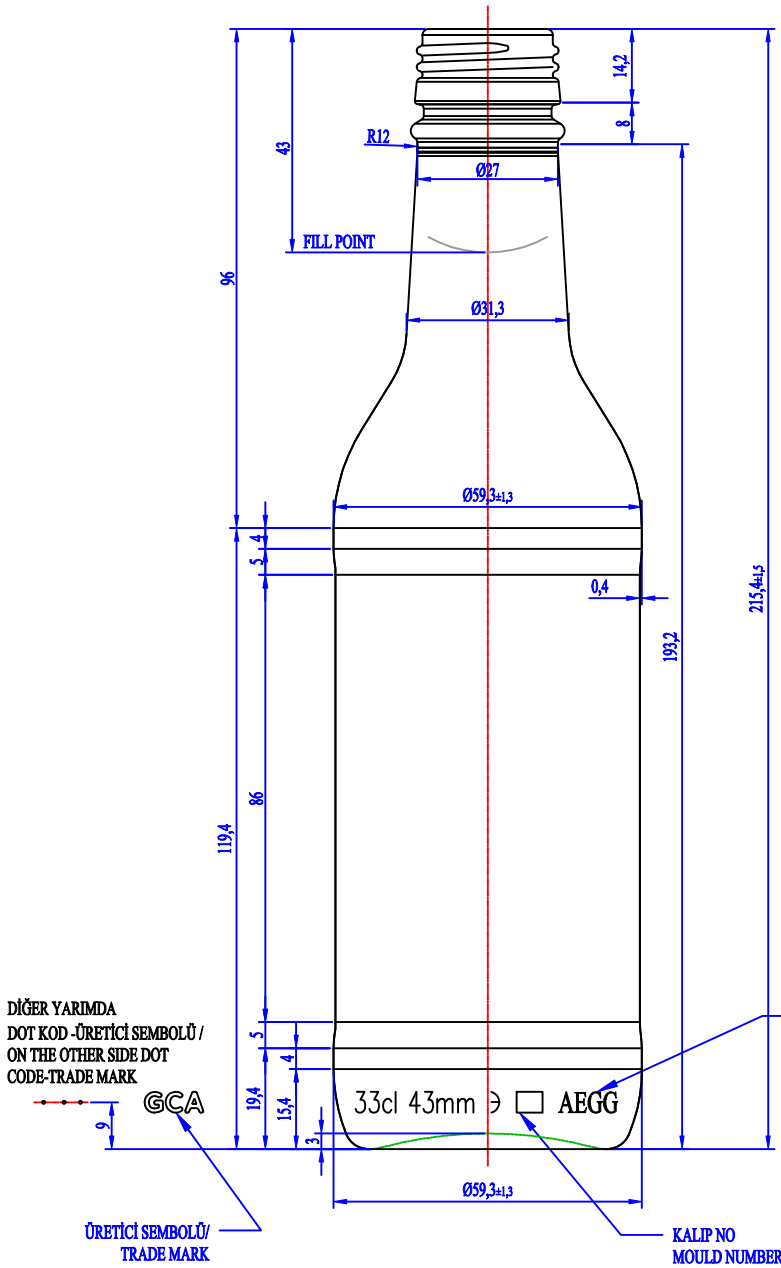

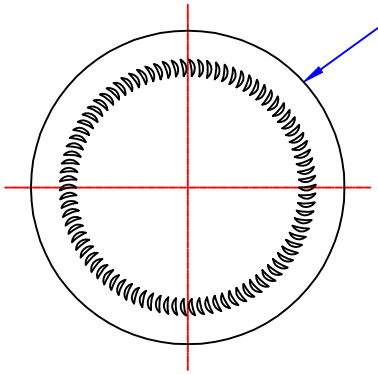

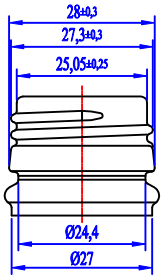

ÜRÜN ÖZEL./ITEM SPEC.	
KOD/CODE	****
CİNSİ/BEVERAGE	With Gin/ Bottle
SİLME HACİM/ BRIMFULL CAPACITY	345±7cc
CAM GRAMAJI/ WEIGHT	195 gr
DOLUM HACMİ/ FILLING CAPACITY	330 cc
BOY/LENGTH	215,4 mm
KAFA YAPISI/ FINISH TYPE	28 MCA 3 WITH BEAD
DENGE AÇISI/TILT ANGLE	15,04°
TCK/TGT	2,19 mm
MAX. İÇ BASINÇ(20°)/MAX INT. PRESSURE(20°)	10 bar
DOLUM BAOŞLUGUVACUITY	%4,3
VERSİYON/VERSION	V1

V1A | ALİ TALİP DEMİR | ÜRÜN GÖVDE ÇAPI Ø59,6 mm iken Ø59,3 mm olacak şekilde revize edilmiştir.

FRİG 33cl

TASARIM/DESIGNED BY	OSMAN DEĞER		
ÇİZEN/DRAWN BY	MUSTAFA AKYOL		
KONTROL/CHECKED BY			
ONAY/PASSED BY			
TARİH/DATE	25.04.2024	P&B	B&B
PROSES/PROCESS			

GCA

ÖLÇEK/SCALE 1/1

GCA TASARIMI OLAN BU RESİM HİÇBİR ŞEKİLDE YETKİLİDEN İZİN ALMADAN KULLANILAMAZ,ÇOĞALTILAMAZ, DEĞİŞTİRİLEMEZ VE BAŞKASINA VERİLEMEZ. / WITHOUT THE WRITTEN CONSTENT OF GCA UNAUTHORIZED USE AND-OR REPODUCTION OF THE TECHNICAL DRAWINGS, AND-OR SHARING OF THE MENTIONED DOCUMENTS WITH THE THIRD PARTIES ARE STRICTLY PROHOBITED.