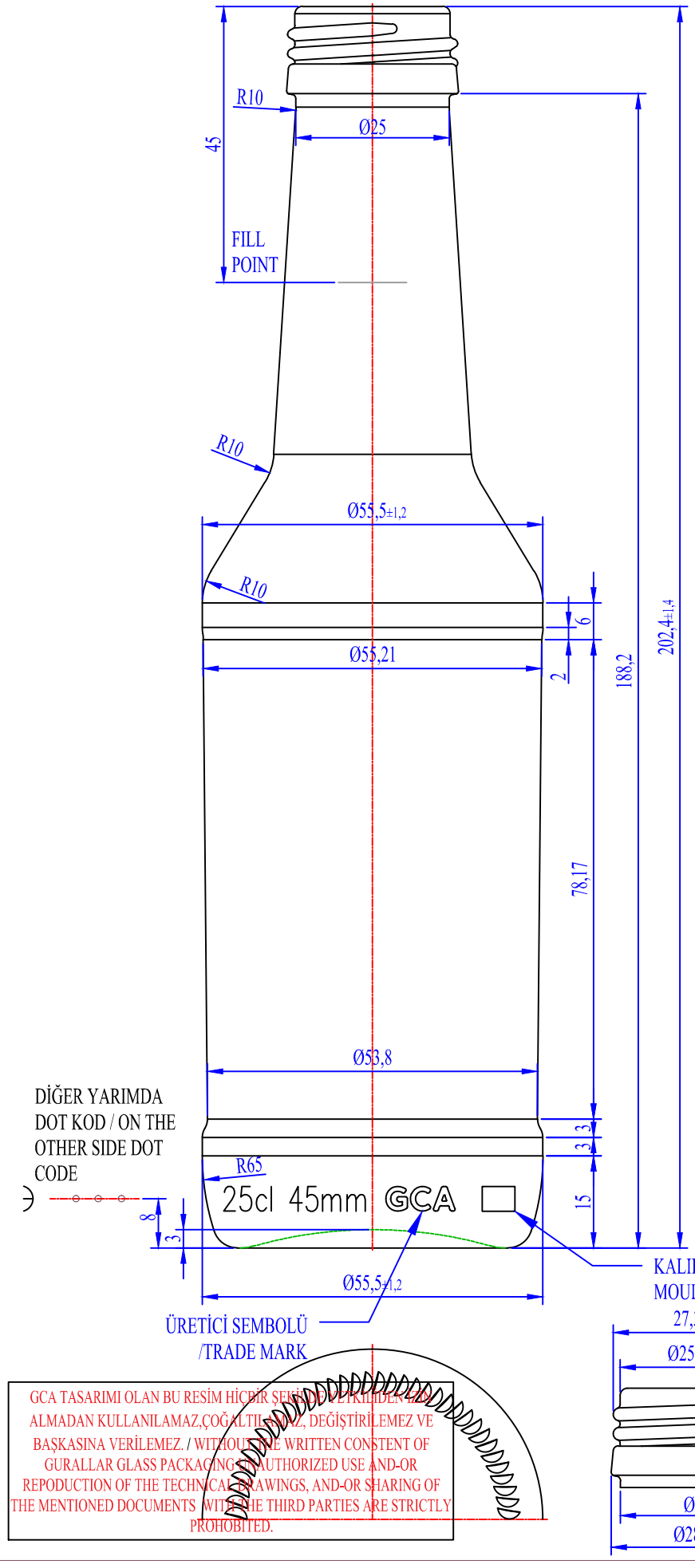

ÜRÜN ÖZEL./ITEM SPEC.	
KOD/CODE	****
CİNSİ/BEVERAGE	Şişe / Bottle
SİLME HACİM/ BRIMFULL CAPACITY	265±6cc
CAM GRAMAJI/ WEIGHT	157 gr
DOLUM HACMİ/ FILLING CAPACITY	250 cc
BOY/LENGTH	202,4 mm
KAFA YAPISI/ FINISH TYPE	MCA 2
DENGE AÇISI/TILT ANGLE	17,38°
TCK/TGT	2,08mm
MAX. İÇ BASINÇ(20°)/MAX INT. PRESSURE(20°)	****
DOLUM BOŞLUGU/VACUITY	%5,6
GRUP NO / GROUP NO VERSİYON / VERSION	****

ANONİM MEŞRUBAT 25cl

TASARIM/DESIGNED BY	MUSTAFA ÇETİN		
ÇİZEN/DRAWN BY	MUSTAFA AKYOL		
KONTROL/CHECKED BY		23.06.2025	P&B
ONAY/PASSED BY			B&B
TARİH/DATE			ANNB
PROSES/PROCESS			

ÖLÇEK/SCALE 1/1

GCA TASARIMI OLAN BU RESİM HİÇBİR ŞEKİLDE İZİNİMİZ ALINMADAN KULLANILAMAZ,ÇOĞALTILAMAZ, DEĞİŞTİRİLEMEZ VE BAŞKASINA VERİLEMEZ. / WITHOUT OUR WRITTEN CONSTENT OF GURALLAR GLASS PACKAGING UNAUTHORIZED USE AND-OR REPODUCTION OF THE TECHNICAL DRAWINGS, AND-OR SHARING OF THE MENTIONED DOCUMENTS WITH THE THIRD PARTIES ARE STRICTLY PROHOBITED.