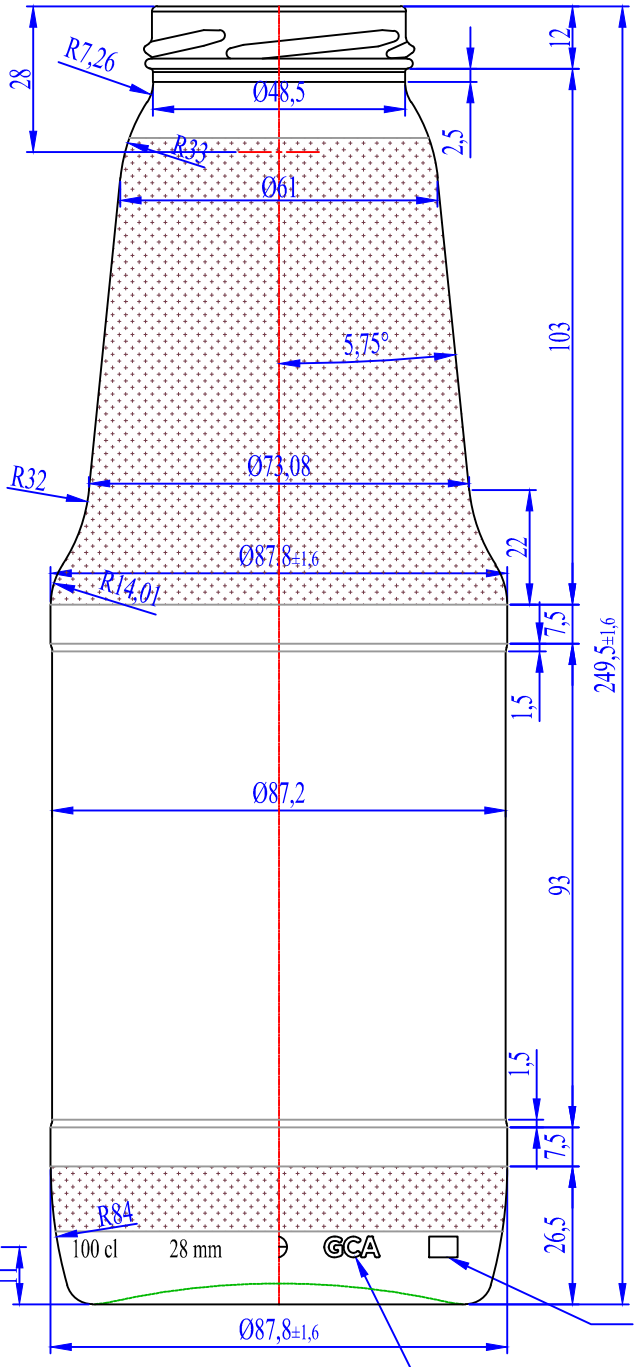

ÜRÜN ÖZEL./ITEM SPEC.	
KOD/CODE	*****
CİNSİ/BEVERAGE	Kavanoz/Jar.
SİLME HACİM/ BRIMFULL CAPACITY	1040cc±10,4cc
CAM GRAMAJI/ WEIGHT	360 gr
DOLUM HACMİ/ FILLING CAPACITY	1000 cc
BOY/LENGTH	249,5 mm
KAFA YAPISI/ FINISH TYPE	53 TO
DENGE AÇISI/TILT ANGLE	18,63°
TCK/TGT	2,13 mm
MAX. İÇ BASINÇ(20°)/MAX INT. PRESSURE(20°)	**
DOLUM BAOŞLUGU/VACUITY	%0,4
GRUP NO / GROUP NO VERSİYON / VERSION	74141 257 V1

ANONİM 100 cl

TASARIM/DESIGNED BY	AYHAN KORKMAZ		
ÇİZEN/DRAWN BY	MUSTAFA AKYOL		
KONTROL/CHECKED BY		23.12.2024	B&B
ONAY/PASSED BY			PKB
TARİH/DATE			NNPB
PROSES/PROCESS			

GCA

ÖLÇEK/SCALE 1/1

2/1

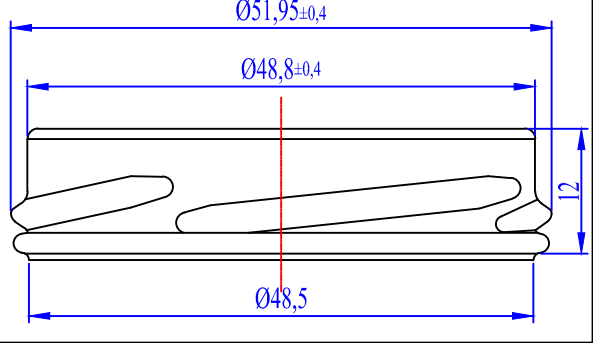

GCA TASARIMI OLAN BU RESİM HİÇBİR ŞEKİLDE YETKİ ALINMADAN ALMADAN KULLANILAMAZ,ÇOĞALTILAMAZ, DEĞİŞTİRİLEMEZ VE BAŞKASINA VERİLEMEZ. / WITHOUT THE WRITTEN CONSENT OF GCA UNAUTHORIZED USE AND-OR REPODUCTION OF THE TECHNICAL DRAWINGS, AND-OR SHARING OF THE MENTIONED DOCUMENTS WITH THE THIRD PARTIES ARE STRICTLY PROHOBITED.